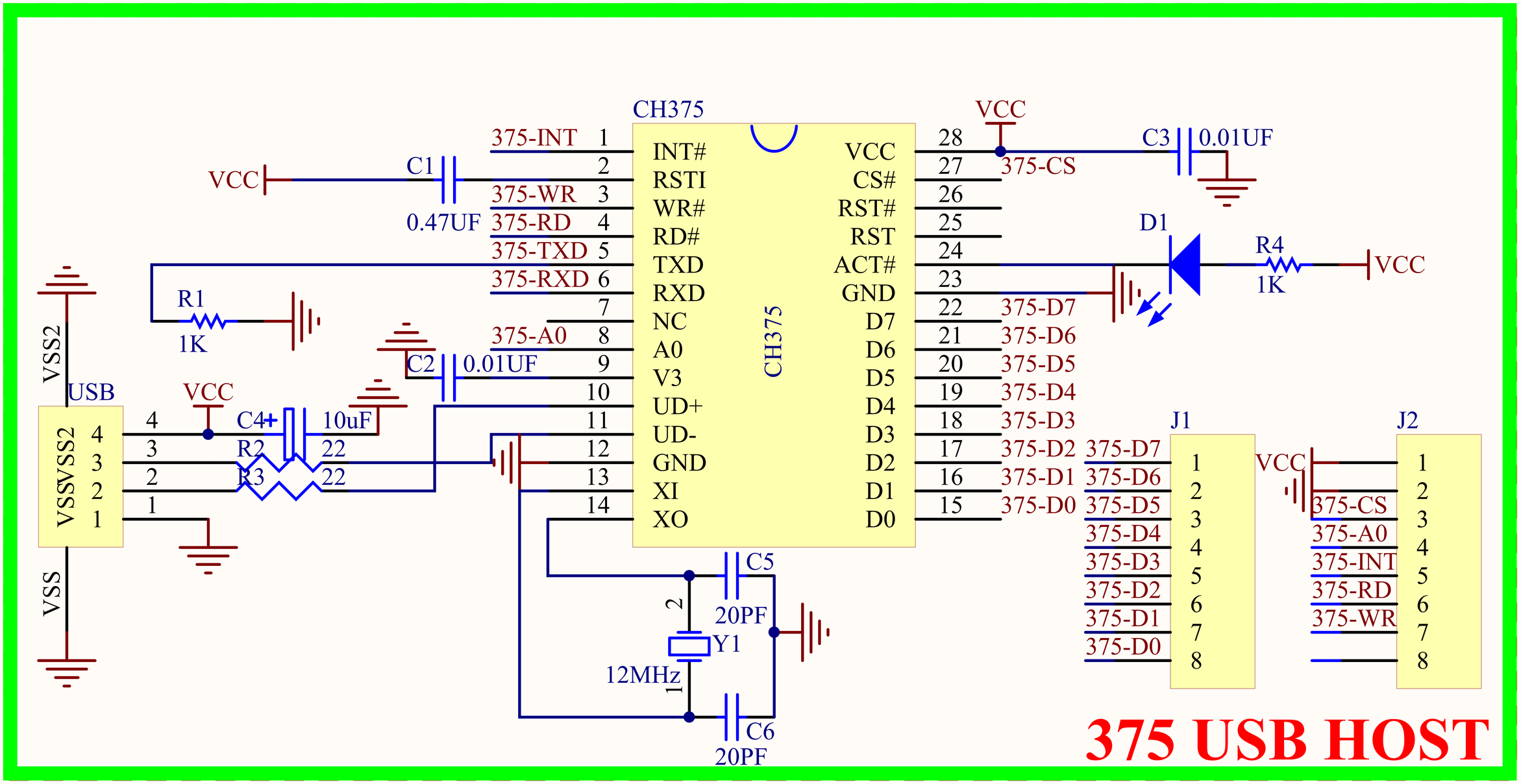

Title		
Size A4	Number	Revision
Date: 2008-12-31		Sheet of
File: E:\ \..\UPan.SCHDOC		Drawn By: